CSE18HC0P3100

受 控 文 件

鸣志电器(太仓)有限公司

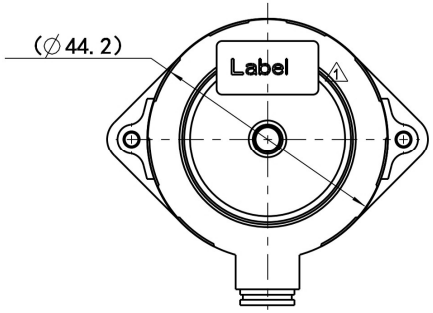

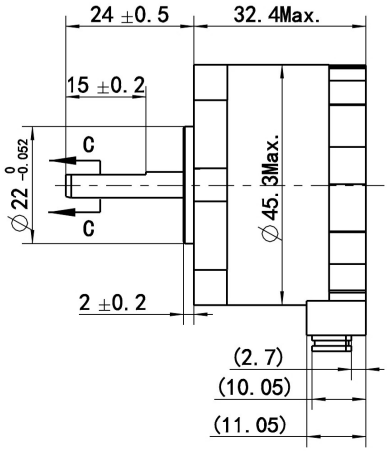

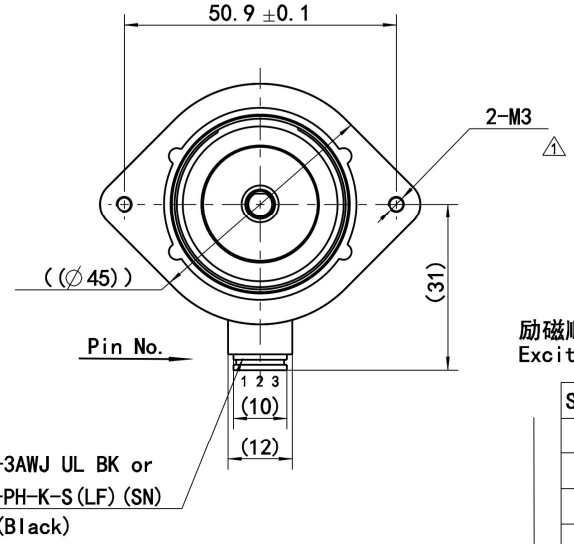

接线图
Wiring Diagram

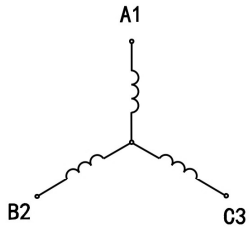

励磁顺序VS.旋转方向
Exciting Sequence vs.Direction of Rotation

STEP	A	B	C
1	+	−	
2		−	+
3	−		+
4	−	+	
5		+	−
6	+		−

CCW

CW

从安装面看为顺时针方向
Clockwise view from mounting side

C-C
2:1

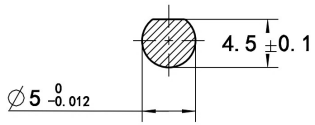

铭牌 Label Detail

混合式步进电机规格 Hybrid Stepping Motor Specifications	
1.相数 Number of Phase	3
2.步距角 Step Angle	1.2°
3.额定电压 Rated Voltage	8.63 V DC
4.额定电流 Rated Current	1 Amp
5.保持力矩 Holding Torque	0.42 Nm Typ.(Two phase on/rated current)
6.相电阻 Phase Resistance	8.63 ohm±10% (20℃)
7.相电感 Phase Inductance	17.55 mH±20%(1kHz 1V rms)
8.转子惯量 Rotor Inertia	145 gcm^2
9.电机重量 Motor Weight	0.23 kg
10.绝缘等级 Insulation Class	B (130℃)

备注：转轴负载条件 Shaft load condition
1.轴向动态负载 Dynamic axial load------ 25N Max
2.径向动态负载 Dynamic radial load------ 29N Max

REV.	版本记录 REVISION RECORD	DATE
A1	ECR:23-098 共2处 1	2023.02.08
A0	版本记录 Originl revision	2022.11.01

Unit:mm
第一角画法
First angle method
未注线性与角度尺寸公差
Tolerances for linear and angular dimensions without individual tolerance indications
GB/T 1804-m eqv ISO 2768-1:m
未注形状与位置尺寸公差
Geometrical tolerance for features without individual tolerance indications
GB/T 1184-K eqv ISO 2768-2:K

UNLESS OTHERWISE SPECIFIED

NAMES	SIGNATURE	DATE
批准 Approve		
标准化 Standardize		
工艺 Process Review		
审核 Check		
设计 Design		

MOONS'
moving in better ways

This document is released for information only. Its reproduction in whole or in part or its dissemination to third parties is prohibited.
All trademarks and registered trademarks appearing on this document are the property of their respective owners.

Drawing No: 4611110064860 | Rev. A1 | SCALE: 1:1 | Sheet 1 of 1